Circuit Breakers

IDEC

For more information on this product family, visit our website.
Additional resources include:

- New and updated product information
- Downloadable software demos & upgrades
- Part configuration tool & cross reference
- Online stock check & ordering
- IDEC field sales & distributor search
- Online literature request
- Downloadable manuals & CAD drawings
- Manufacturer's suggested retail price list
- Product training schedule & locations
- Advertising & trade show schedules
- Press releases & FAQs

www.idec.com/circuitbreaker

Selection Guide

Series Model	NRA	NRBM	NRC
Page	883	893	900
Appearance			
Actuator Style	Lever and Rocker (non-illuminated and illuminated)	Lever	Slide, lever
Number of Poles	Lever: 1, 2, 3 Rocker: 1	1, 2, 3	1, 2
Protection Method	Electromagnetic trip		
Internal Circuits	Series current trip		
Auxiliary Contact	Optional (250V AC, 5A; 50V DC, 1A)	Optional (250V AC, 5A; 50V DC, 1A)	
Alarm Contact	Optional (250V AC, 5A; 50V DC, 1A)	Optional (250V AC, 5A; 50V DC, 1A)	
Inertia Delay	Optional (for resistance to high inrush)	Optional (for resistance to high inrush)	—
Time Delay Curves	2 types for DC; 3 types for AC	2 types for DC; 3 types for AC	2 types for DC; 2 types for AC
Rated Voltage	250V AC, 50/60Hz, 65V DC		
Rated Tripping Currents	0.3A, 0.5A, 0.75A 1A, 2A, 3A, 5A, 7.5A, 10A, 15A, 20A, 25A, 30A	1A, 2A, 3A, 5A, 7.5A, 10A, 15A, 20A, 25A, 30A, 40A, 50A	0.3A, 0.5A, 0.75A, 1A, 2A, 3A, 5A, 7.5A, 10A, 15A, 20A, 25A, 30A
Rated Interruption Capacity	1,000A, 250V AC (50/60Hz), 65V DC	1,000A, 250V AC (50/60Hz), 65V DC	2,500A, 220V AC (50/60Hz, 1-pole) 1,500A, 220V AC (50/60Hz, 2-pole) 1,500A, 65V DC (1-pole) 1,000A, 65V DC (2-pole)
Approvals	Lever: UL, c-UL, VDE Rocker: UL	UL, c-UL, VDE	UL, CSA

1. For dimensions, see end of each section.
2. UL recognized, applicable standard: UL1077, "Supplementary Protectors."
3. Not suitable for branch circuit protection.

UL Recognized
File No. E68029

File No. LR83454
NRC Series

NRA/NRBM Series Only
License #116381/113434

NRA Series

Features:

- Available in 4 different styles
- Excellent overload and short circuit protection
- Small size and high-efficiency
- Life expectancy of over 10,000 operations
- UL1077 recognized "Supplementary Protectors"
- VDE certified to EN60934

File No. E68029

License #116381

NRAS

NRAN

NRAR

Rocker

Illuminated Rocker (with Neon lamp)

Specifications

Protection Method	Electromagnetic tripping
Internal Circuit	Series current trip
Number of Poles	NRAS and NRAN: 1, 2, 3 NRAR: 1
Rated Voltage	250V AC, 50/60Hz, 65V DC
Rated Tripping Currents	0.3A, 0.5A, 0.75A 1A, 2A, 3A, 5A, 7.5A, 10A, 15A, 20A, 25A, 30A
Rated Interrupting Capacity	250V AC, 50/60Hz, 1,000A 65V DC, 1,000A
Auxiliary Contact	SPDT microswitch: 250V AC, 5A (resistive load), 50V DC, 1A (resistive load)
Alarm Contact	SPDT microswitch: 250V AC, 5A (resistive load), 50V DC, 1A (resistive load)
Reference Temperature	25°C
Operating Temperature	–40 to +85°C (avoid freezing)
Insulation Resistance	100MΩ (measured with 500V megger)
Dielectric Strength	Between main circuit terminals: 2,000V AC, 1 minute Between main circuit and auxiliary contact: 2,000V AC, 1 minute
Vibration Resistance	100N (approximately 10G) (10 to 100Hz)
Shock Resistance	1,000N (approximately 100G)
Life Expectancy	Minimum 10,000 cycles (at 6 operations per minute)
Termination	Main terminal: Quick-connect receptacle 0.250" (accepts M3.5 screw terminal adapter) Auxiliary contact, alarm contact: Quick-connect receptacle 0.080"
Illumination Voltage (NRAR illuminated units)	Neon: 120, 240V AC, 50/60Hz

Not suitable for branch circuit protection.

Part Numbering Guide

NRA series part numbers are composed of up to 8 part number codes. When ordering an NRA series part, select one code from each category.
Example: NRAR 1 1 11 -F - 30A -AA -1

NRAR	1	1	11	—	F	—	30A	—	AA	—	1
① Model	② Poles	③ Internal Circuit	④ Auxiliary and Alarm Contacts		⑤ Inertia Delay		⑥ Rated Current		⑦ Time Delay Curve		⑧ Pilot Light*

Part Number Codes: NRA Series

	Description	Part Number Code	Remarks
① Model	Lever (round cutout)	NRAS	
	Lever (rectangular cutout)	NRAN	
	Rocker	NRAR	
② No. of Poles	1-pole	1	NRAR available in 1-pole only. All multi-pole circuit breakers are simultaneous throw/simultaneous break. All levers are mechanically interlocked.
	2-pole	2	
	3-pole	3	
③ Internal Circuit	Series current trip	1	
④ Auxiliary and Alarm Contacts	Without	00	
	With auxiliary contact	11	Auxiliary contact switches change state with lever and/or overload condition
	With alarm contact	21	Alarm contact switches change state only with overload condition
⑤ Inertia Delay	Without inertia delay	Blank	
	With inertia delay	F	
⑥ Rated Current	Rated current (current trip)	0.3A, 0.5A, 0.75A, 1A, 2A, 3A, 5A, 7.5A, 10A, 15A, 20A, 25A, 30A	All current ratings must be listed in amps (A). Example conversion: 300mA = 0.30A.
⑦ Time Delay Curve	AC curves	AA, BA,MA	For time delay curves, see page 888.
	DC curves	AD, MD	
⑧ Pilot Light*	With neon light 120V AC (50/60Hz)	1	*Applicable to illuminated NRAR only.
	With neon light 240V AC (50/60Hz)	2	

1. For NRA series accessories, see page 886.
2. For NRA series time delay curves, see page 888.
3. For NRA series dimensions, see page 890.
4. Not suitable for branch circuit protection.
5. UL recognized, applicable standard: UL1077, "Supplementary Protectors."

Information About Circuit Breakers

Time Delay Curve Descriptions

Time Delay Curve	NRA Application
AD, AA	Common curves used in molded-case circuit breakers.
BA	Response to overcurrent is quite fast. Suited for protection of semiconductor circuits with very little overload tolerance. If overcurrents are expected to flow, fuses may be required according to the circuit characteristics.
MD, MA	Suited for motor loads that draw high inrush currents lasting a considerable length of time.
With Inertia Delay (F)	Designed not to trip on 20 times the rated current (peak value) for a duration of 8ms. Suited for transformer and lamp loads that draw steep inrush currents.

Inertia Delay Description

Circuit breakers equipped with inertia delay do not respond to high inrush currents such as those produced by transformer, lamp, or motor loads, but perform specified interruption on rated overcurrents.

Specify inertia delay by inserting an "F" in the part number as shown in Part Number Guide on previous page.

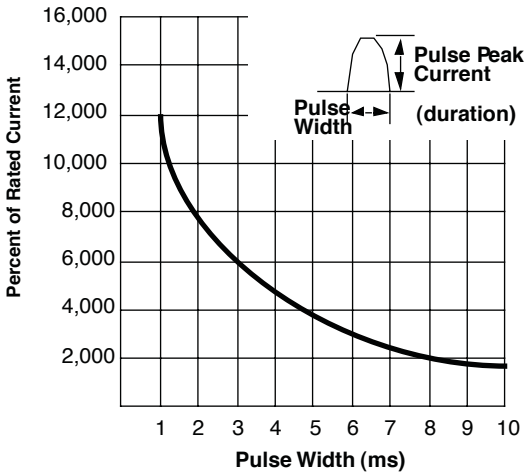

1. Percent of Rated Current $= \frac{\text{Pulse Peak Current}}{\text{Protector Rated Current}} \times 100\%$

2. Based on sinusoidal or parabolic pulse profile.

Notes

Multi-Pole

Multi-pole types such as 2- or 3-pole should be assembled by IDEC.
Because of their characteristics, 1-pole breakers cannot be combined to provide multi-pole units.

Auxiliary and Alarm Contacts

Multi-pole units can incorporate auxiliary and alarm contacts.
Auxiliary and alarm contacts will not work with IDEC's DIN rail adapters.

Accessories

Part Numbers: NRA Series Accessories

Description		Appearance	Part No.	Remarks
Color Caps (NRAS only)	Red	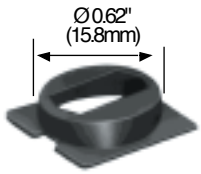	NR5R	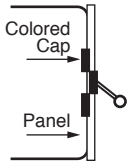 Colored caps fit onto NRAS circuit breakers for color coding circuits and improving the appearance of the panel.
	Blue		NR5S	
	Yellow		NR5Y	
	White		NR5H	
Screw Terminal Adapter (1 pair)			NRT	For use on main terminals only. Includes M3.5 clamp screw. For dimensions see page 892.

Part Numbers: NRA Mounting Accessories

Description	Appearance	For Model	Number of Poles	Part Number	Remarks
Panel Mount Flush Plate	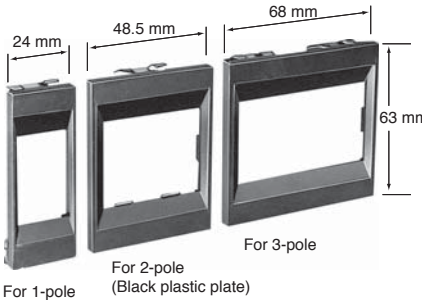	NRAN NRAR	1-pole	NR31	Use of a flush plate makes snap-in mount possible for NRAN, and NRAR circuit breakers (tightening screws not necessary). Multiple units can mount in a single panel cut-out.
		NRAN	2-pole	NR32	
		NRAN	3-pole	NR33	
DIN Rail Plug-in Base	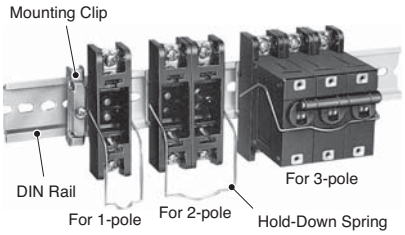	NRAS NRAN	1-pole	NR21	1. Furnished with a hold-down spring. 2. Applicable only for series trip units up to 20 amps. 3. Not applicable for NRAR lighted series. 4. Not for use with circuit breakers incorporating auxiliary or alarm contacts.
			2-pole	NR22	
			3-pole	NR23	
		NRAR	1-pole	NR211	
Surface Mount Plug-in Base		NRAS NRAN	1-pole	NUS1	
			2-pole	NUS2	
			3-pole	NUS3	
		NRAR	1-pole	NUS11	

For dimensions of NRA series accessories and panel cut-out layouts, see drawings starting on page 891.

Internal Circuits and Terminal Arrangements: NRAS and NRAN Series

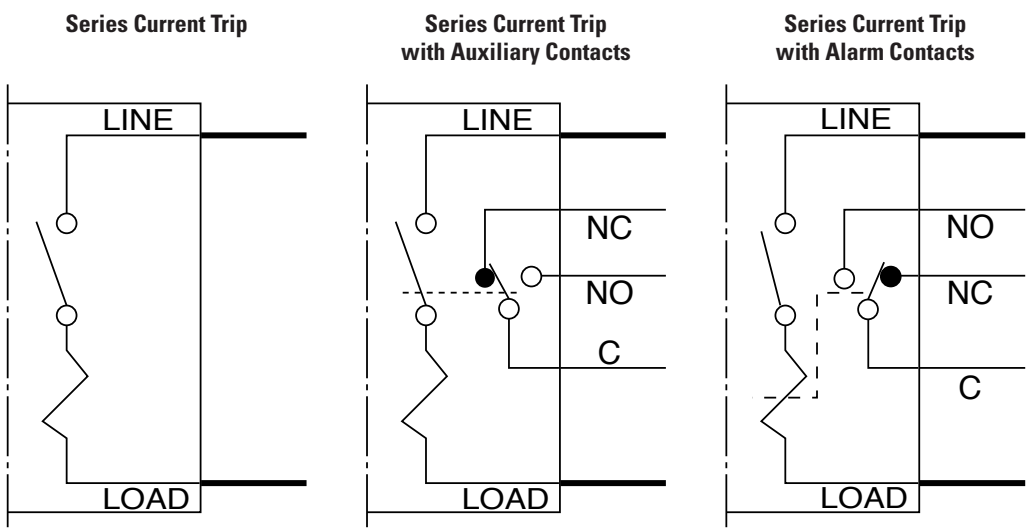

Internal Circuits and Terminal Arrangements: NRAR Series

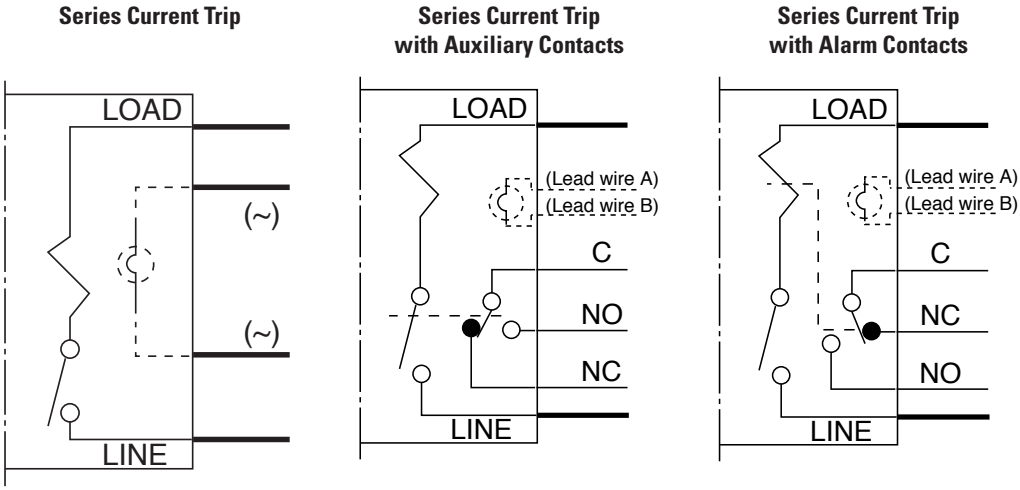

Pilot Lights (NRAR only)

	Lead Wire	
Pilot Light	**A**	**B**
Neon (120V AC)	White	White
Neon (240V AC)	Black	Black

Dashed lines represent NRAR illuminated rocker units. Lead wires for neon pilot light as shown above.

Time Delay Curves (numerical equivalent)

Overcurrent — Time Delay Characteristics in Seconds (at 25°C)

		Percent of Rated Current							
	Curve	**100%**	**125%**	**150%**	**200%**	**400%**	**600%**	**800%**	**1000%**
AC (50/60Hz)	**AA**	No trip	10 – 120	6 – 45	2.2 – 15	0.3 – 2	0.05 – 0.55	0.007 – 0.13	0.005 – 0.04
	BA	No trip	0.75 – 10	0.45 – 3.5	0.22 – 1.3	0.045 – 0.22	0.012 – 0.12	0.005 – 0.06	0.004 – 0.03
	MA	No trip	60 – 900	30 – 260	9 – 70	1.5 – 8	0.18 – 2.5	0.009 – 0.25	0.006 – 0.08
DC	**AD**	No trip	10 – 130	6 – 55	2.6 – 20	0.5 – 3.5	0.12 – 1.4	0.008 – 0.1	0.005 – 0.05
	MD	No trip	35 – 400	20 – 200	7 – 60	1.3 – 8	0.2 – 3	0.01 – 0.25	0.006 – 0.08

1. All values above are in seconds.
2. Data in this table is equivalent to information presented in the time delay curves shown on page 888.

Time Delay Curves – NRA Series

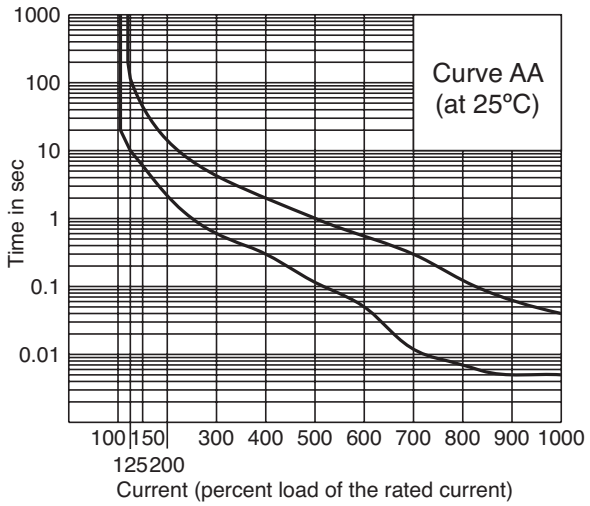

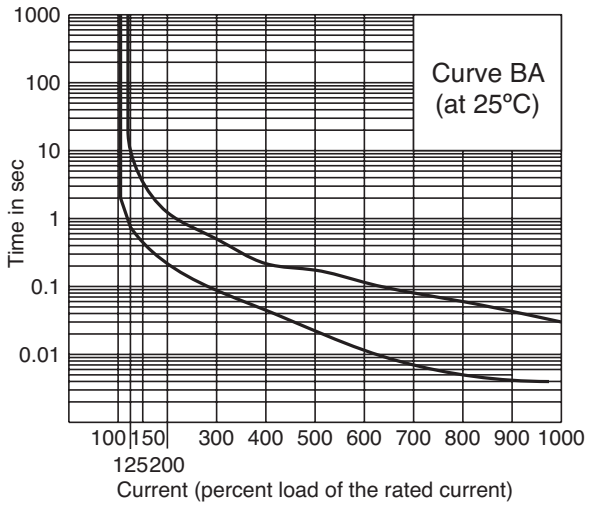

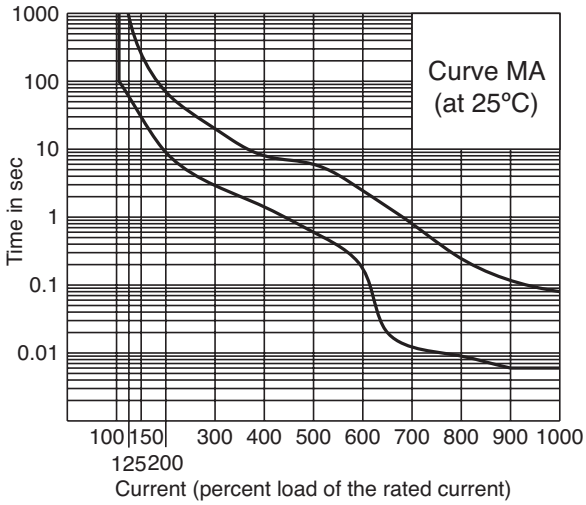

DC Time Delay Curves

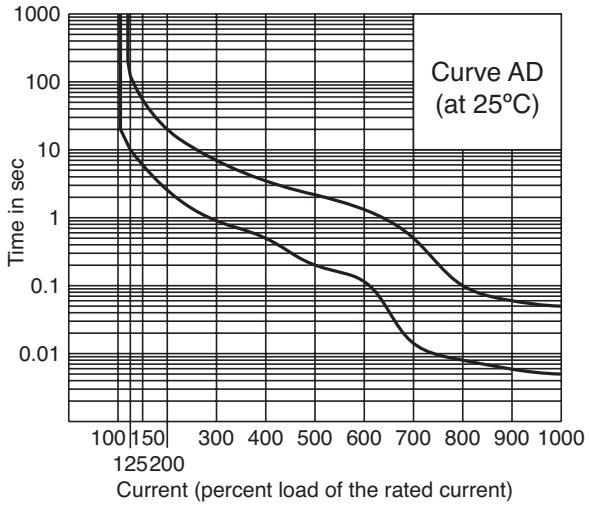

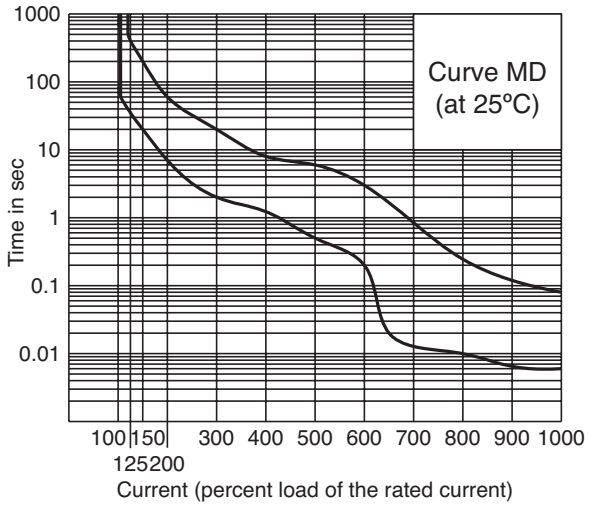

Resistance and Impedance Characteristics

Coil Data

Rated Current	DC Resistance	AC Impedance (50/60Hz)
	Curves AD, MD	Curves AA, BA, MA
0.3A	9.67Ω	9.82Ω
0.5A	3.24Ω	3.36Ω
0.75A	1.45Ω	1.49Ω
1A	0.90Ω	0.92Ω
2A	0.21Ω	0.21Ω
3A	0.09Ω	0.092Ω
5A	0.036Ω	0.036Ω
7.5A	0.017Ω	0.018Ω
10A	0.012Ω	0.012Ω
15A	0.0066Ω	0.0068Ω
20A	0.0048Ω	0.0048Ω
25A	0.0043Ω	0.0043Ω
30A	0.0036Ω	0.0041Ω

Tolerance ±25% (up to 20A), ±50% (25A and over).

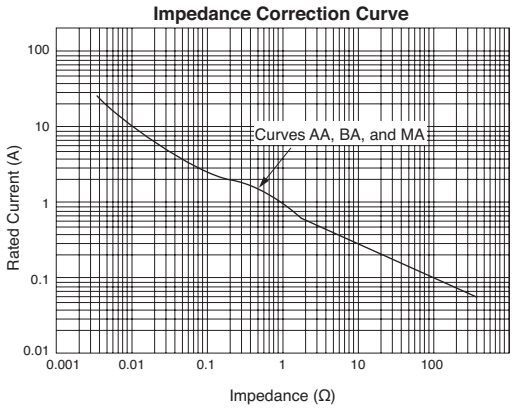

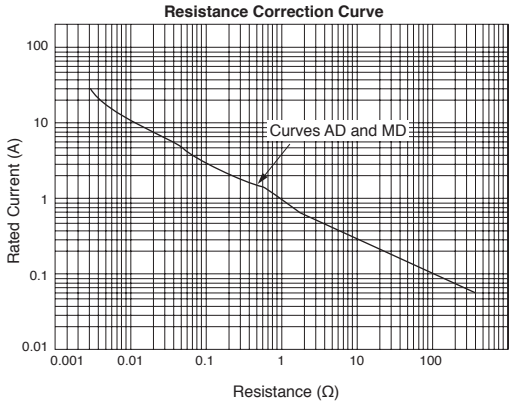

Voltage Drop Due to Resistance or Impedance

The internal resistance or impedance of a circuit breaker tends to be larger for a smaller rated current. Therefore, when circuit breakers with a small rated current are used, voltage drop should be taken into consideration. Internal resistance also varies with time delay curves, even at the same rated current. This should also be considered during installation.

Time Delay Curve and Ambient Temperature

Since NRA series circuit breakers employ an electromagnetic tripping system, the rated current (trip current) is not affected by the ambient temperature, but the time delay varies with the oil viscosity in the tube. Lower oil viscosity at higher temperatures results in shorter delay; whereas at lower temperatures, the delay will be prolonged. The time delay curves, shown starting on page 888, are at 25°C. Time delay curves can be corrected.

Temperature Correction Curves

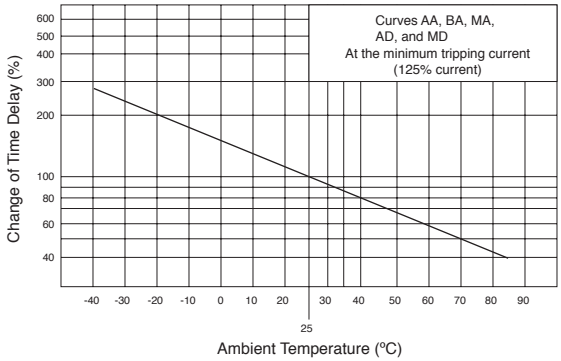

Dimensions

NRAS

• 1-pole

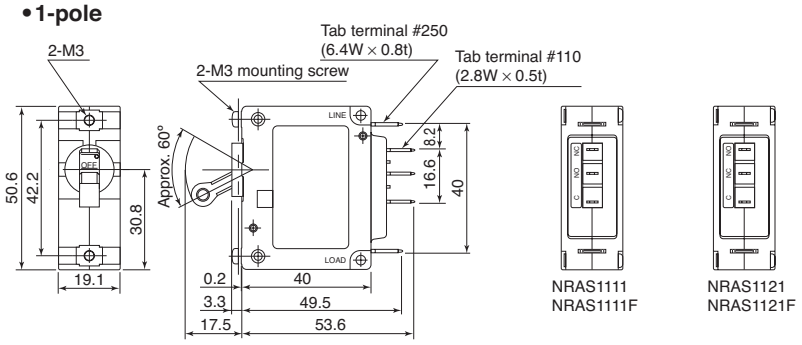

• 2-pole

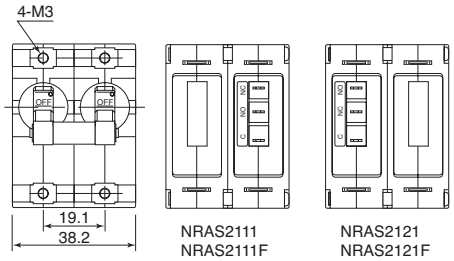

• 3-pole

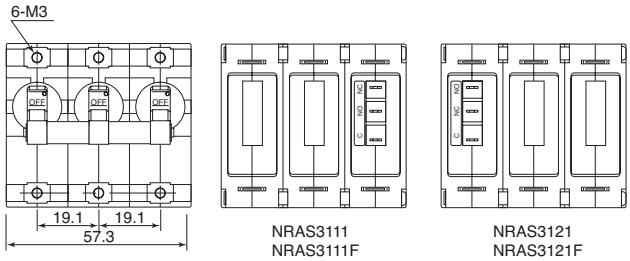

NRAN

• 1-pole

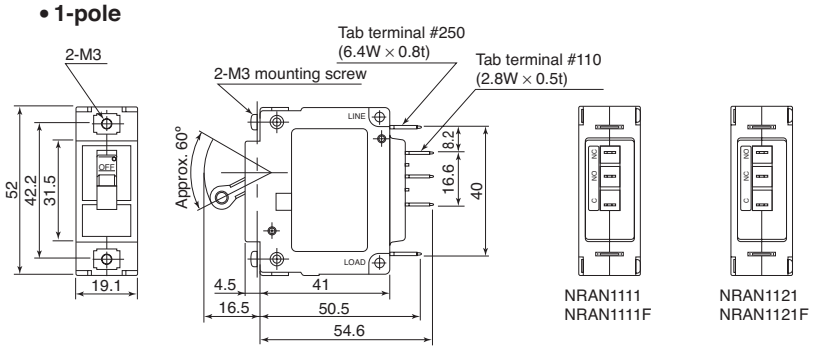

• 2-pole

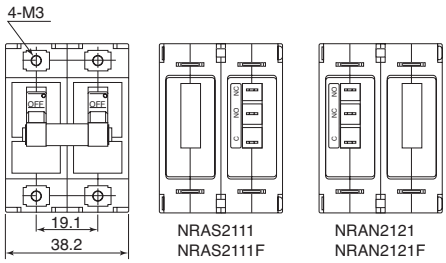

• 3-pole

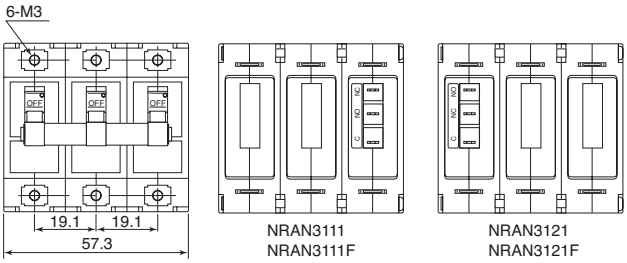

NRAR

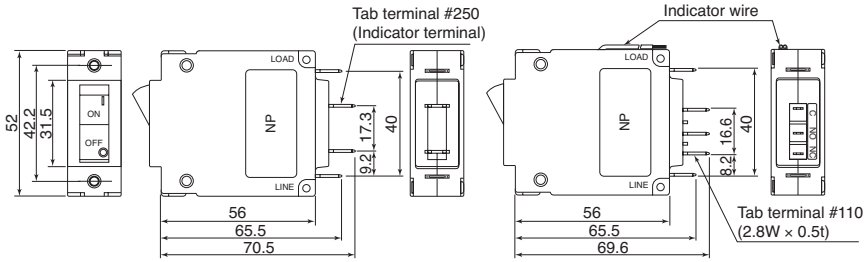

Panel Cut-Outs

NRAS Series

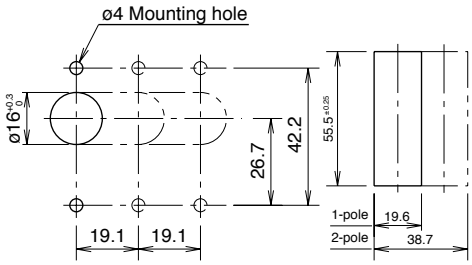

NRAR, NRAN

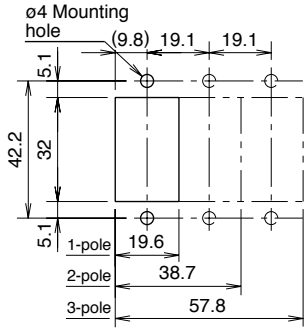

NR31, NR32, NR33 – Panel Mount Flush Plate

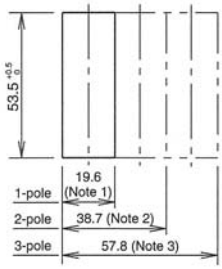

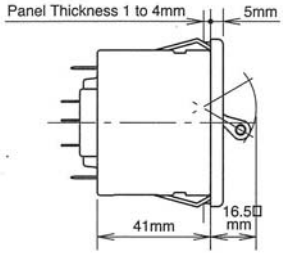

Panel cut-out when two or more units are mounted closely (n = number of units).
Note 1: 24.3n - 5
Note 2: 48.8n - 10
Note 3: 69.3n - 10

Installation Angle: Circuit breakers are designed to operate on a vertical surface. The mounting angle should not exceed a vertical plane by more than 10°.

Model	Maximum Mounting Distance A	Maximum Mounting Distance B	Dimensions (mm)
NRAS	3.02" (77.5mm)	3.57" (91.5mm)	Mounting to Panel Surface / Mounting to DIN Rail
NRAN	3.02" (77.5mm)	3.57" (91.5mm)	
NRAR	3.38" (86.7mm)	3.93" (100.7mm)	

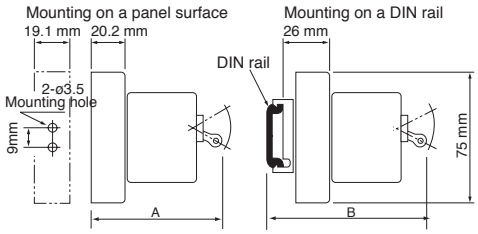

Accessory Dimensions

NRT: Screw Terminal Adapter (for use with NRA Series)

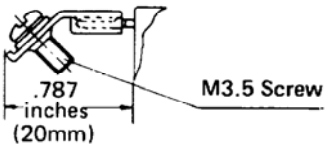

1. For use on main terminals only.
2. Includes M3.5 clamp screw.

BNDN1000 Aluminum DIN Rail

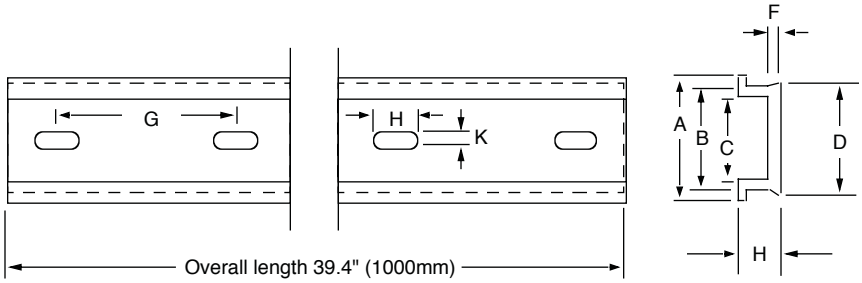

	Length in Inches (mm)
A	1.4" (35mm)
B	1.14" (29mm)
C	0.78" (23mm)
D	1.2" (31mm)
E	0.41" (10.5mm)
F	0.11" (3mm)
G	2" (51mm)
H	0.47" (12mm)
K	0.16" (4mm)

NRBM Series

NRBM circuit breakers are the largest in rated current (1A to 50A) among the IDEC circuit breakers series. These small sized, high-efficiency breakers offer a variety of protection characteristics that can be widely employed for semiconductors, relay circuits, heater circuits, transformers, and solenoids.

Key features of the NRBM series include:

- Excellent overload and short circuit protection
- Small size and high efficiency
- Life expectancy of over 10,000 operations
- UL1077 recognized Supplementary Protectors
- VDE Certified to EN60934

File No. E68029

License #113434

General Specifications

Protection Method	Electromagnetic tripping
Internal Circuit	Series current trip
Number of Poles	1, 2, 3
Rated Voltage	250V AC, 50/60Hz, 65V DC
Rated Tripping Currents	Current trip: 1A, 2A, 3A, 5A, 7.5A, 10A, 15A, 20A, 25A, 30A, 40A, 50A
Rated Interrupting Capacity	250V AC, 50/60Hz, 1,000A 65V DC, 1,000A
Auxiliary Contacts / Alarm Contact	SPDT microswitch 250V AC, 5A (resistive load) 50V DC, 1 A (resistive load)
Reference Temperature	25°C
Ambient Operating Temperature	–40 to +85°C (avoid freezing)
Insulation Resistance	100MΩ (measured with 500V megger)
Dielectric Strength	Between main circuit terminals: 2,000V AC, 1 minute Between main circuit and auxiliary contact: 2,000V AC, 1 minute
Vibration Resistance	100N (approximately 10G), 10 to 55Hz
Shock Resistance	1,000N (approximately 100G)
Life Expectancy	10,000 operations minimum (at 6 operations per minute)
Terminal Style	Main terminal: M5 stud Auxiliary contact/ alarm contact: Quick-connect tab 0.110" terminal
Weight	1-pole/100g 2-pole/200g 3-pole/300g

Not suitable for branch circuit protection.

Part Numbering Guide

NRBM series part numbers are composed of 6 part number codes. When ordering an NRBM series part, select one code from each category.
Example: NRBM 1 1 11 F-30A-AA

NRBM	1	1	11	F	—	30A	—	AA
	① Poles	② Internal Circuit	③ Auxiliary and Alarm Contacts	④ Inertia Delay		⑤ Rated Current		⑥ Time Delay Curve

Part Number Codes: NRA Series

	Description	Part Number Code	Remarks
① **No. of Poles**	1-pole	1	All multiple pole circuit breakers are simultaneous throw/simultaneous break. All levers are mechanically interlocked.
	2-pole	2	
	3-pole	3	
② **Internal Circuit**	Series current trip	1	
③ **Auxiliary and Alarm Contacts**	Without	00	
	With auxiliary contact	11	Auxiliary contacts change state with lever and/or overload condition
	With alarm contact	21	Alarm contacts change state only with overload condition
④ **Inertia Delay**	Without inertia delay	Blank	
	With inertia delay	F	
⑤ **Rated Current**	Rated current (current trip)	1A, 2A, 3A, 5A, 7.5A, 10A, 15A, 20A, 25A, 30A, 40A, 50A	
⑥ **Time Delay Curve**	AC curves	AA, BA,MA	See page 897 for delay curves.
	DC curves	AD, MD	

1. For NRBM series time delay curves, see page 897.
2. For NRBM series dimensions, see page 899.
3. Not suitable for branch circuit protection.
4. UL recognized, applicable standard: UL1077, "Supplementary Protectors."

Information About Circuit Breakers

Time Delay Curve Descriptions

Time Delay Curve	NRBM Application
AD, AA	Common curves used in molded-case circuit breakers.
BA	Response to overcurrent is quite fast. Suited for protection of semiconductor circuits with very little overload tolerance. If overcurrents are expected to flow, fuses may be required according to the circuit characteristics.
MD, MA	Suited for motor loads that draw high inrush currents lasting a considerable length of time.
With Inertia Delay (F)	Designed not to trip on 20 times the rated current (peak value) for a duration of 8ms. Suited for transformer and lamp loads that draw steep inrush currents.

Inertia Delay Descriptions

Circuit breakers equipped with inertia delay do not respond to high inrush currents such as those produced by transformer, lamp, or motor loads, but perform specified interruption on rated overcurrents.

Inertia delay is available with time delay curves AD, MD, AA, BA, and MA.

Specify inertia delay by inserting an "F" in the part number as shown in Part Number Guide on previous page.

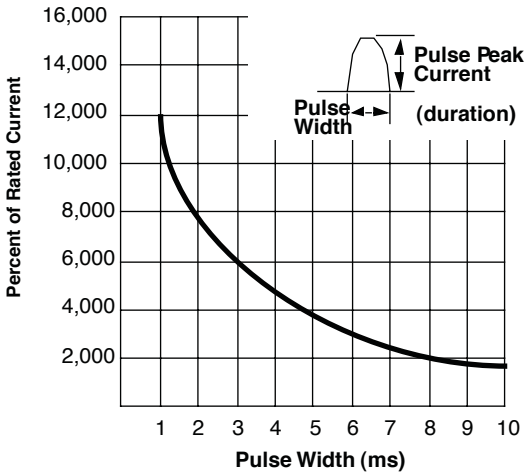

1. Percent of Rated Current $= \frac{\text{Pulse Peak Current}}{\text{Protector Rated Current}} \times 100\%$

2. Based on sinusoidal or parabolic pulse profile.

Notes

Multi-Pole

Multi-pole types such as 2- or 3-pole should be assembled by IDEC.

Because of their characteristics, 1-pole breakers cannot be combined to provide multi-pole units.

All multi-pole units are simultaneous break/simultaneous make, with levers mechanically interlocked.

Auxiliary and Alarm Contacts

Multi-pole units with auxiliary contacts will have one set of auxiliary contacts on the right-most breaker. Multi-pole units with alarm contacts will have one set of alarm contacts on the left-most breaker.

Internal Circuits and Terminal Arrangements

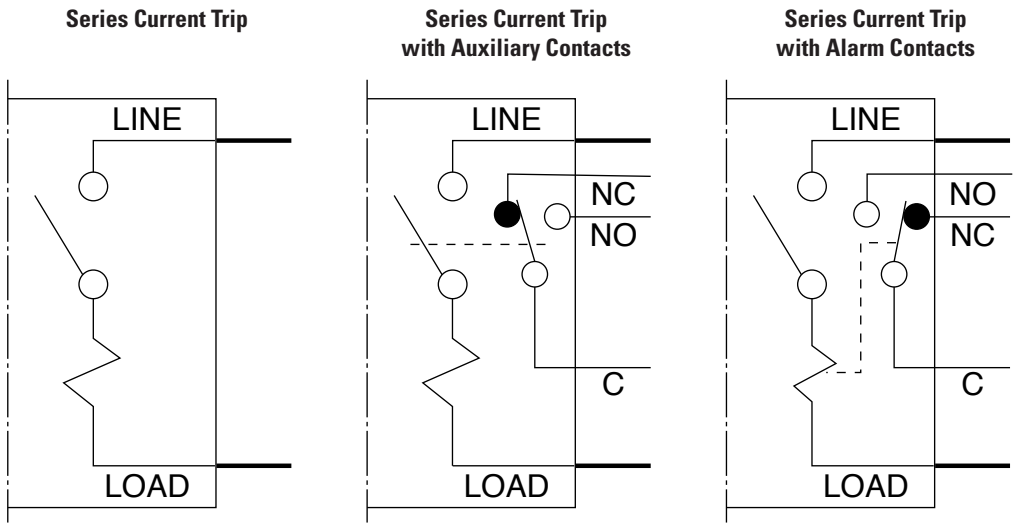

Time Delay Curves (numerical equivalent)

Overcurrent — Time Delay Characteristics in Seconds (at 25°C)

		Percent of Rated Current							
	Curve	100%	125%	150%	200%	400%	600%	800%	1000%
AC (50/60Hz)	AA	No trip	15 – 120	8 – 45	3 – 15	0.48 – 2.5	0.06 – 0.8	0.007 – 0.13	0.005 – 0.04
	BA	No trip	0.75 – 10	0.45 – 3.5	0.22 – 1.3	0.045 – 0.22	0.012 – 0.12	0.005 – 0.06	0.004 – 0.03
	MA	No trip	70 – 900	30 – 260	10 – 70	1.8 – 11	0.5 – 4	0.009 – 1.1	0.006 – 0.2
DC	AD	No trip	10 – 130	6 – 55	2.6 – 20	0.5 – 3.5	0.14 – 1.4	0.008 – 0.7	0.005 – 0.35
	MD	No trip	35 – 400	20 – 180	8 – 60	1.6 – 10	0.6 – 4.5	0.01 – 2	0.007 – 0.5

1. All values above are in seconds.
2. Data in this table is equivalent to information presented in the time delay curves shown on page 897.

AC Time Delay Curves

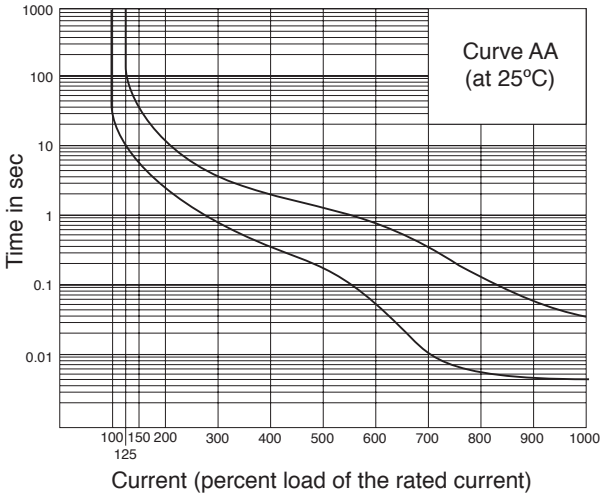

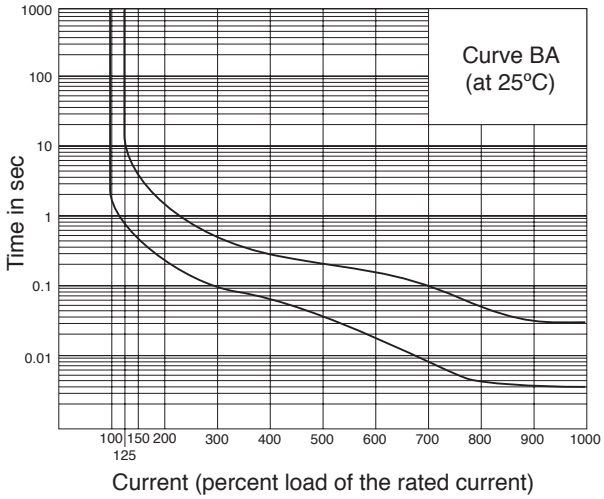

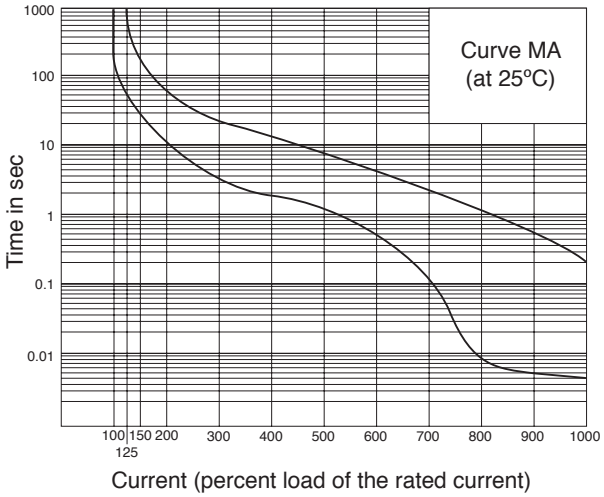

DC Time Delay Curves

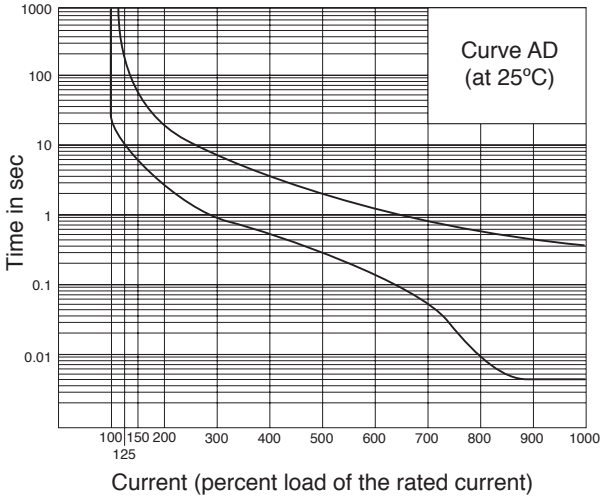

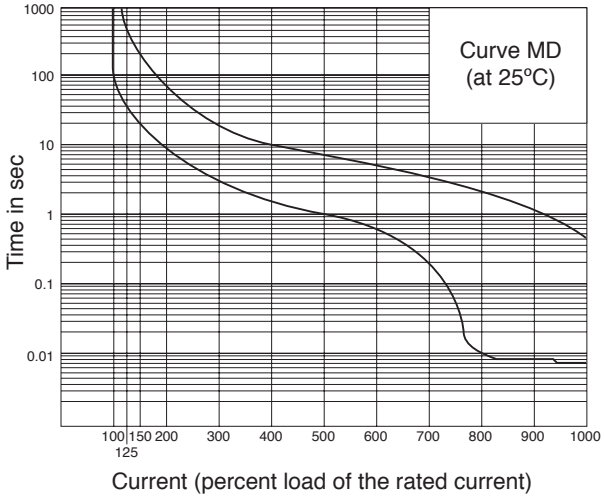

Resistance and Impedance Characteristics

Coil Data

Rated Current	DC Resistance	AC Impedance (50/60Hz)
	Curves AD, MD	Curves AA, BA, MA
1A	1Ω	1.1Ω
2A	0.227Ω	0.245Ω
3A	0.091Ω	0.11Ω
5A	0.035Ω	0.039Ω
7.5A	0.015Ω	0.018Ω
10A	0.0088Ω	0.0124Ω
15A	0.005Ω	0.0065Ω
20A	0.003Ω	0.0047Ω
25A	0.0023Ω	0.0032Ω
30A	0.0019Ω	0.0031Ω
40A	0.0018Ω	0.002Ω
50A	0.0014Ω	0.0016Ω

Tolerance ±25% (up to 20A), ±50% (25A and over).

Coil Resistance at 25ºC

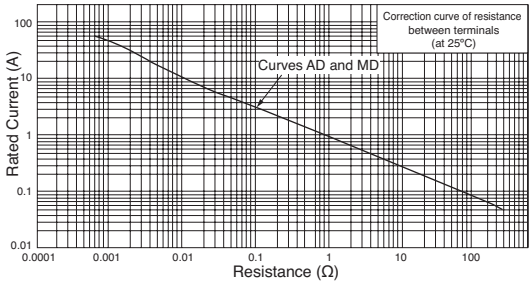

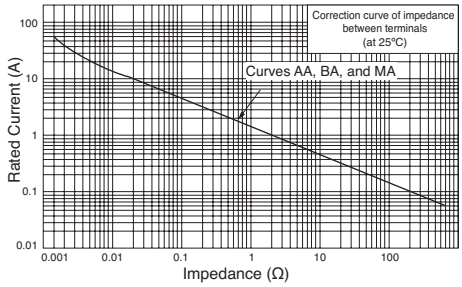

Temperature Correction Curves

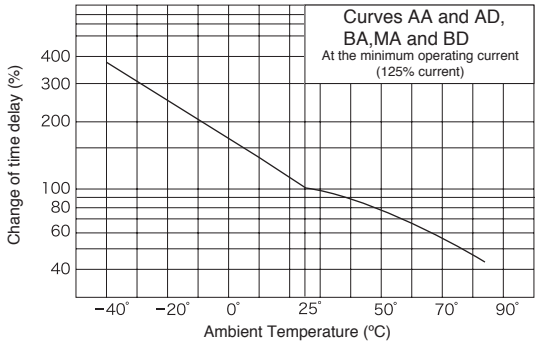

Voltage Drop Due to Resistance or Impedance

The internal resistance or impedance of a circuit breaker tends to be larger for a smaller rated current. Therefore, when circuit breakers of a small rated current are used, voltage drop should be taken into consideration. Internal resistance also varies with time delay curves, even at the same rated current. This should also be considered during installation.

Time Delay Curve and Ambient Temperature

Since NRBM series circuit breakers employ an electromagnetic tripping system, the rated current (trip current) is not affected by the ambient temperature, but the time delay varies with the oil viscosity in the tube. Lower oil viscosity at higher temperatures results in shorter delay; whereas at lower temperatures, the delay will be prolonged. The time delay curves, shown starting on page 897, are at 25°C. Time delay curves can be corrected.

Dimensions: NRBM Series

NRBM

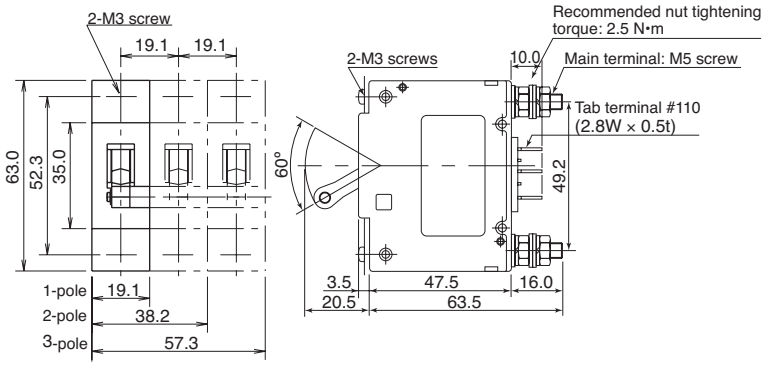

NRBM Series

Panel Cut-Outs

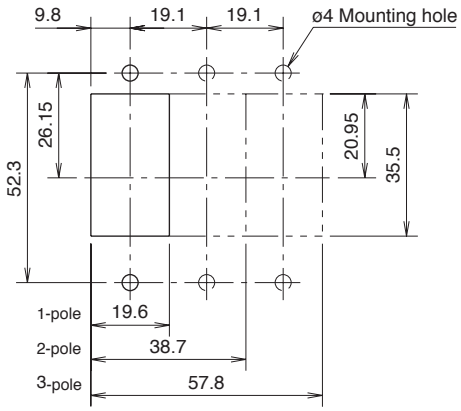

Drawings are not to scale.

NRC Series

NRC series circuit breakers offer circuit protection which is far superior to using fuses in applications containing relay circuits, motor circuits, heater circuits, transformers, solenoid valves, and semiconductors.

Key features of the NRC series include:

- Mounting options include DIN rail, direct surface, or panel cut-out
- Rated interrupting capacity of 2,500A (1-pole) and 1,500A (2-pole)
- Choice of slide or lever actuators
- All models equipped with reset trip indicators
- Four curves available for standard or very short delay
- Available in 11 rated currents from 300mA to 30A
- UL1077 recognized "Supplementary Protectors"

UL Recognized
File No. E68029

CSA Certified
File No. LR83454

Specifications

Protection Method	Electromagnetic tripping
Internal Circuit	Series current trip
Number of Poles	1, 2
Rated Voltage	250V AC (50/60Hz), 65V DC
Rated Tripping Currents	0.3A, 0.5A, 1A, 2A, 3A, 5A, 7A, 10A, 15A, 20A, 30A
Rated Interrupting Capacity	2,500A, 250V AC, 50/60Hz (2-pole: 1,500A)
Auxiliary Contact	SPDT contact output 250V AC 3A (resistive load) 65V DC 1A (resistive load))
Reference Temperature	40°C
Operating Temperature	–10 to +60°C (avoid freezing)
Insulation Resistance	100MΩ (500V megger)
Dielectric Strength	Between the live part and the ground, between terminals of different poles, between terminals of the same pole, and between main circuit and auxiliary contact: 2,000V AC, 1 minute
Vibration Resistance	100N (approximately 10G) (10 to 55Hz)
Shock Resistance	500N (approximately 50G)
Life	10,000 operations minimum
Terminal Style	Main terminal: M4 screw (20A maximum) M5 screw (30A model) Auxiliary terminal: M3.5 screw
Weight (approximate)	1-pole: 115g, 2-pole: 230g

Not suitable for branch circuit protection.

Part Numbering Guide

NRC series part numbers are composed of 5 part number codes. When ordering an NRC series part, select one code from each category.
Example: NRC 1 1 1L-30A-AA

NRC	11	1	L	—	30A	—	AA
	① Number of Poles	② Auxiliary Contacts	③ Actuator Type		④ Rated Current		⑤ Time Delay Curve

Part Number Codes: NRA Series

	Appearance	Description	Part Number Code	Remarks
① **No. of Poles**		1-pole	11	
		2-pole	21	
② **Auxiliary Contacts**		No	0	
		Yes	1	
③ **Actuator Type**		Slide	Leave blank	Slide actuator available only for 1-pole models.
		Lever	L	
④ **Rated Current**			0.3A, 0.5A, 1A, 2A, 3A, 5A, 7A, 10A, 15A, 20A, 30A	
⑤ **Time Delay Curve**			AC curves: AA, EA; DC curves: AD, ED	

1. For NRC series accessories, see page 902.
2. For NRC series time delay curves, see page 903.
3. For NRC series dimensions, see page 905.

Accessories

Part Numbers: DIN Rail and Mounting Clips

Description	Appearance	Part No.	Remarks
Aluminum DIN Rail (1 meter length)		BNDN1000	For dimensional drawing, see page 908.
DIN Rail End Clip Metal end clip used to prevent side-to-side movement of circuit breakers when mounted on a DIN rail. One clip required at each end.		BNL5	
Panel Cut-Out Mounting Bracket Mounting bracket used to mount circuit breaker(s) in panel cut-outs. Not applicable for models with auxiliary contacts (NRC111, NRC111L, NRC211L). When mounting 2-pole models (NRC210L), use two brackets side-by-side. It is recommended to use the "Fast-On Tab Terminal Adapter" (below) when using this bracket.	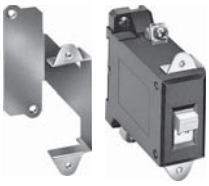	NRC-M	For dimensional drawings, see page 907.
Surface Mounting Bracket Used for direct surface mounting 1-pole circuit breaker models.		NRC-F	For dimensional drawings, see page 907.
Fast-On Tab Terminal Adapter Adapter used for Fast-On wiring termination. Fast-On tab extends 0.47" (12mm) in length. Cannot be used to replace models with M5 main terminals (30A). Fast-On terminal adapter recommended when using panel cut-out mounting bracket for rear wiring.		NRC-T	
Jumper Used for jumping auxiliary terminals. The rated current for jumper is 3A.		NRC-J	

For dimensions of NRC series accessories, see page 907.

Internal Circuits and Terminal Arrangements

Type	1-pole without auxiliary contact	1-pole with auxiliary contact	2-pole without auxiliary contact	2-pole with auxiliary contact
	NRC110, NRC110L	NRC111, NRC111L	NRC210L	NRC211L
Series Trip	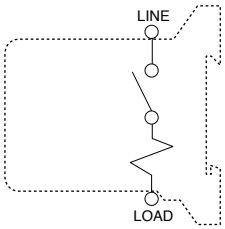	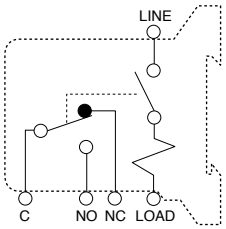	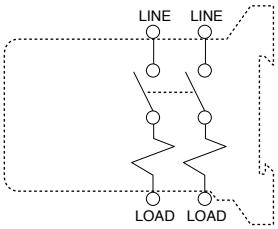	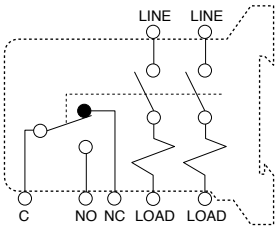

Time Delay Curves (numerical equivalent)

Overcurrent — Time Delay Characteristics in Seconds (at 40ºC)

		Percent of Rated Current							
	Curve	100%	125%	150%	200%	400%	600%	800%	1000%
AC (50/60Hz)	AA	No trip	40 – 240	10 – 50	3.5 – 18	0.9 – 4	0.35 – 2	0.07 – 1.2	0.01 – 0.5
	EA	No trip	0.04 – 0.4	0.025 – 0.15	0.015 – 0.06	0.007 – 0.025	0.005 – 0.018	0.004 – 0.017	0.004 – 0.017
DC	AD	No trip	40 – 240	10 – 50	3.5 – 18	0.6 – 3	0.008 – 0.5	0.005 – 0.09	0.004 – 0.07
	ED	No trip	0.04 – 0.4	0.025 – 0.15	0.015 – 0.06	0.007 – 0.025	0.005 – 0.018	0.004 – 0.017	0.004 – 0.017

1. All values above are in seconds.
2. Data in this table is equivalent to information presented in the time delay curves below.

Time Delay Curves

AC (50/60 Hz) Time Delay Curves

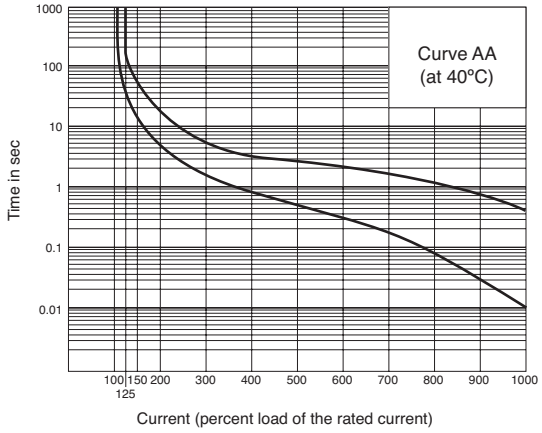

DC Time Delay Curves

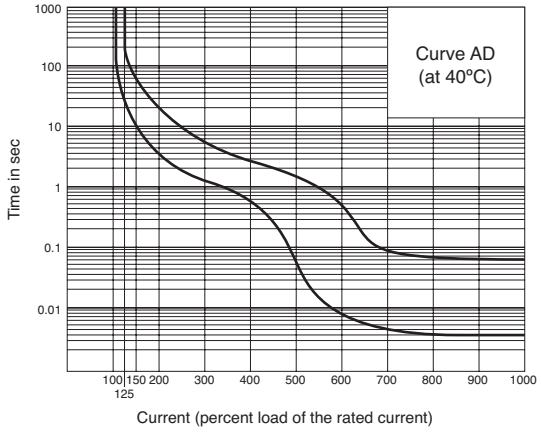

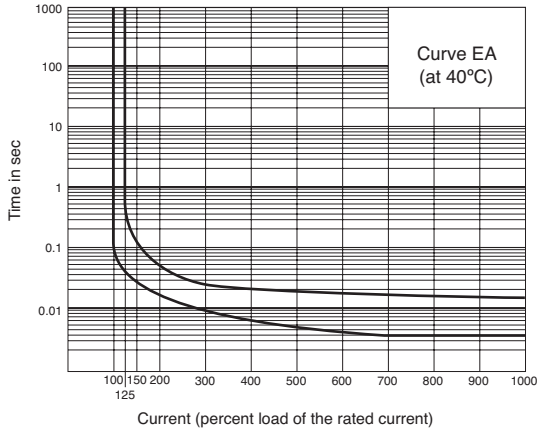

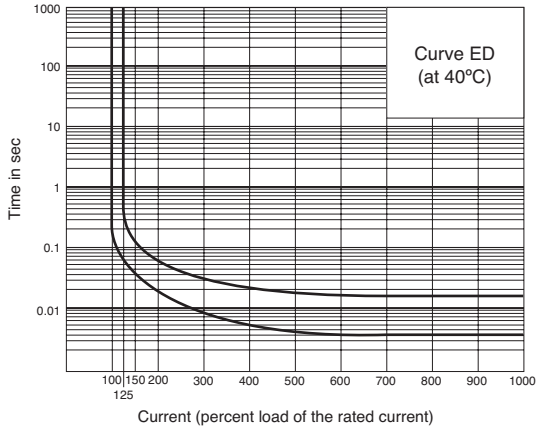

Resistance and Impedance Characteristics

Coil Impedence (at 40ºC)

Rated Current	AC Impedance (50/60Hz)	DC Resistance
0.30A	15.1Ω	25.6Ω
0.50A	5.58Ω	9.04Ω
1A	1.54Ω	2.33Ω
2A	0.341Ω	0.548Ω
3A	0.162Ω	0.261Ω
5A	0.061Ω	0.099Ω
7A	0.031Ω	0.048Ω
10A	0.017Ω	0.026Ω
15A	0.008Ω	0.013Ω
20A	0.0058Ω	0.0075Ω
30A	0.0039Ω	0.0046Ω

Tolerance: ±10% (0.3A to 3A), ±25% (5A to 30A).

Voltage Drop Due to Resistance or Impedance

The internal impedance of a circuit breaker tends to be larger for a smaller rated current. Therefore, when low rated circuit breakers are used, voltage drop should be taken into consideration.

AC Impedance at 40ºC

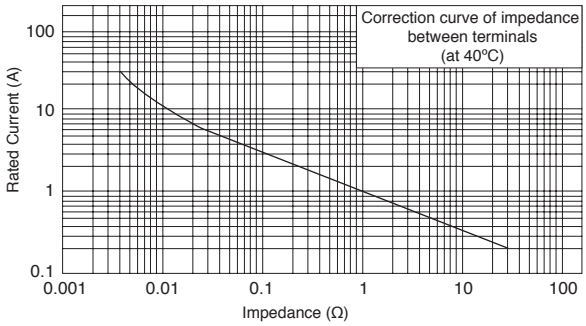

Tolerance: 0.3A to 3A ±10%
5A to 30A ±25%

DC Resistance at 40ºC

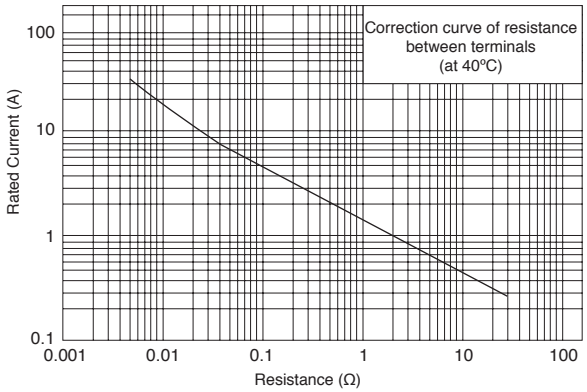

Tolerance: 0.3A to 3A ±10%
5A to 30A ±25%

Temperature Correction Curves

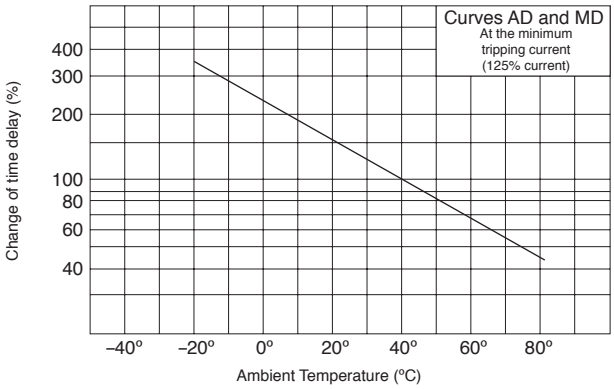

Dimensions: NRC Series

NRC110

Slide Actuator
1-Pole without Auxiliary Contacts

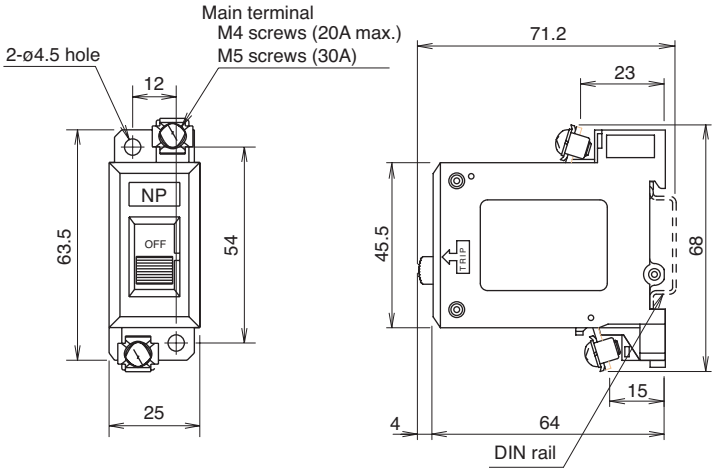

NRC110L

Lever Actuator
1-Pole without Auxiliary Contacts

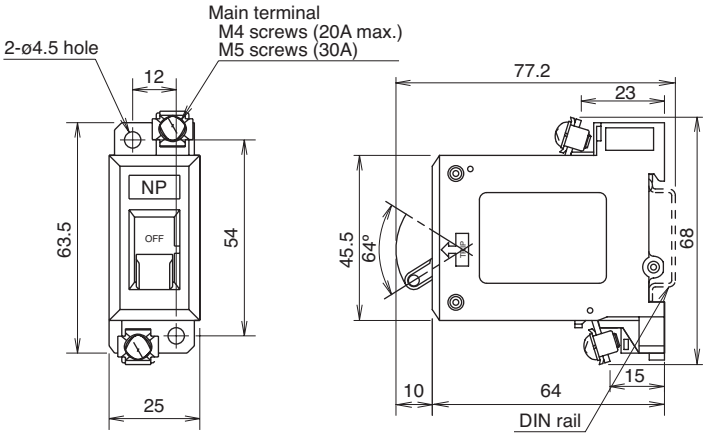

NRC111

Slide Actuator
1-Pole with Auxiliary Contacts

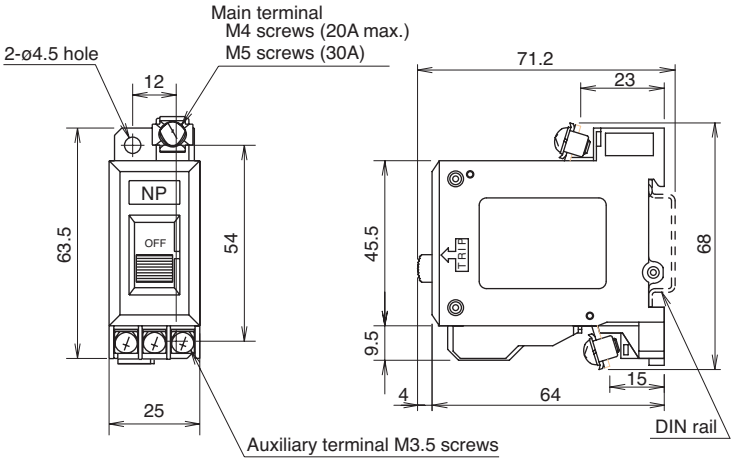

Installation Angle: Circuit breakers are designed to operate on a vertical surface. The mounting angle should not exceed a vertical plane by more than 10°.

Dimensions: NRC Series, continued

NRC111L

Lever Actuator
1-Pole with Auxiliary Contacts

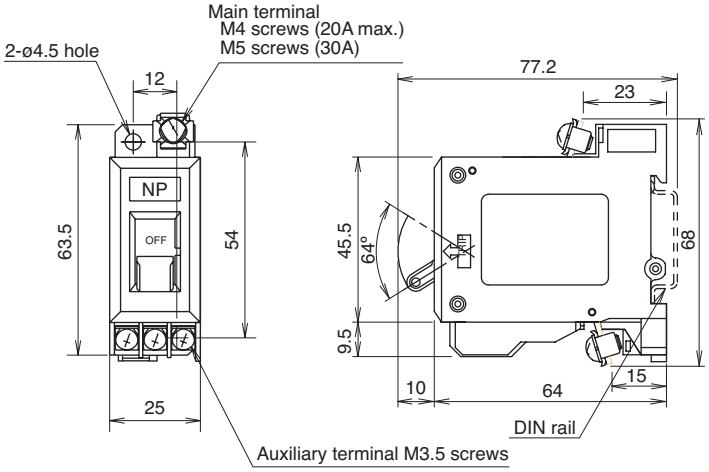

NRC210L

Lever Actuator
2-Pole without Auxiliary Contacts

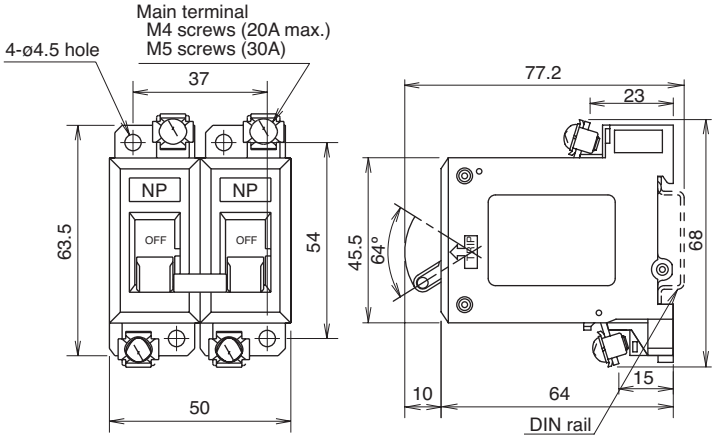

NRC211L

Lever Actuator
2-Pole with Auxiliary Contacts

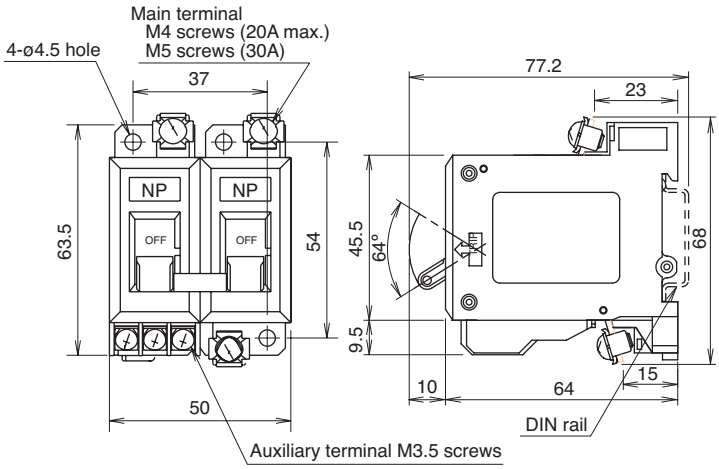

Installation Angle: Circuit breakers are designed to operate on a vertical surface. The mounting angle should not exceed a vertical plane by more than 10°.

Panel Cut-Outs

NRC Series

Surface Mounting Hole Layout 1-Pole

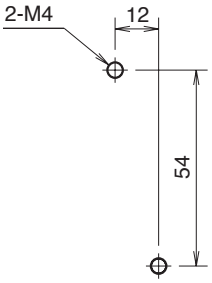

Surface Mounting Hole Layout 2-Pole

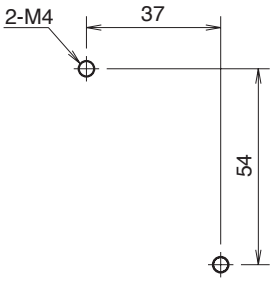

Panel Cut-Out (when using NRC-M)

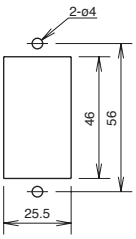

(1-pole type)

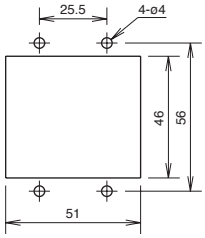

(2-pole type)

Accessory Dimensions

Panel Cut-Out Mounting Adapter (NRC-M

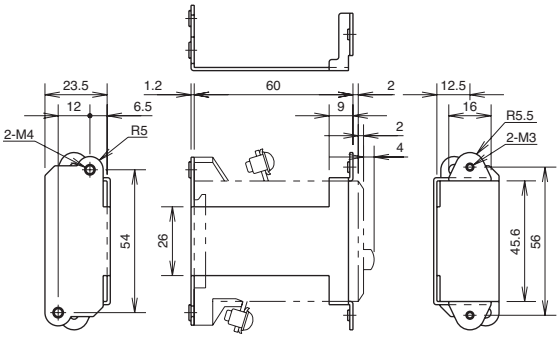

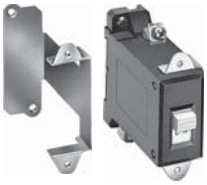

NRC-M Panel Mounting Bracket

Surface Mounting Bracket (NRC-F)

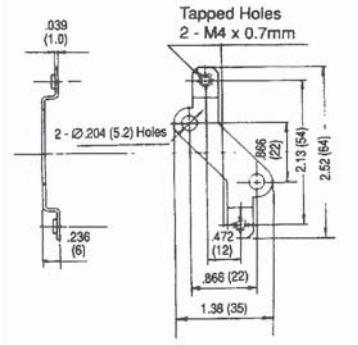

NRC-F Surface Mounting Bracket

Accessory Dimensions, continued

BNDN1000 Aluminum DIN Rail

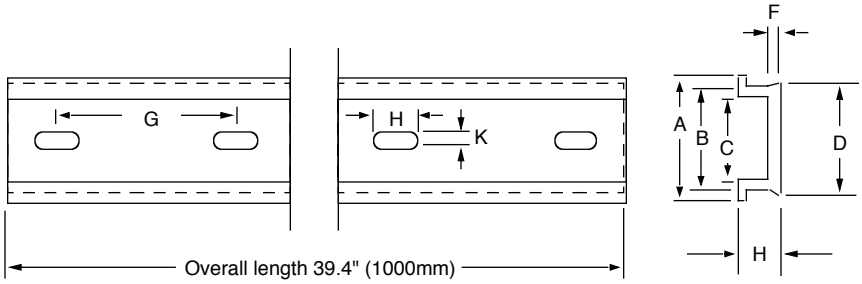

	Length in Inches (mm)
A	1.4" (35mm)
B	1.14" (29mm)
C	0.78" (23mm)
D	1.2" (31mm)
E	0.41" (10.5mm)
F	0.11" (3mm)
G	2" (51mm)
H	0.47" (12mm)
K	0.16" (4mm)

Instructions: All Series

General

IDEC's circuit breakers have been developed for the protection of electrical circuits and small-sized electrical equipment and provide excellent protection against overloads and short-circuits.

Additionally, IDEC's circuit breakers are designed to suit specific needs. Each series offers unique circuit protection characteristics and a choice of actuator styles.

IDEC's Circuit Breaker Features

- Various models are available with different tripping characteristics and rated currents
- 1- to 3- multi-pole
- Inertia delay
- Auxiliary contacts and alarm contacts
- The electromagnetic tripping system is not affected by ambient temperature
- Safe trip-free mechanism
- Vibration- and impact-resistant design
- When using accessories such as plug-in bases, flush plates, and colored caps, a variety of mounting styles is possible — such as DIN rail mounting, snap mounting into panel cut-outs, and color-coded arrangement on the panel

Mounting Instructions: Installation Angle

Designed to be mounted on a vertical surface, the circuit breakers should be mounted on a surface within 10° of the vertical plane. If the circuit breaker is mounted on a horizontal surface or at any angle other than the specified angle, its characteristics will be changed.

Multi-Pole Assemble

Multi-pole types such as 2- or 3-pole should be assembled by IDEC. **Because of their characteristics, 1-pole breakers cannot be combined to produce multi-pole units.**

Applications

The IDEC NRA circuit breaker series features superior overload and short-circuit protection. Many combinations of protection mechanisms and internal circuit connections enable wide applications.

- **Precision measuring instruments:** electronic counters, projection instruments, oscilloscopes, industrial instrumentation, and analytic devices
- **Industrial machinery:** printers, elevators, cranes
- **Chemical and food industry machines:** vacuum devices, wrappers, centrifuges, agitators
- **Machine tools:** mill grinders, drills, presses
- **Business machines:** vending machines, beauty salon equipment, entertainment games
- **Other:** office equipment, air-conditioners, conveyor belts, and many more

How the Breaker Operates

IDEC's hydraulic magnetic circuit breakers operate like a solenoid coil. The coil unit consists of an oil-filled tube with a metal core at one end and a pole piece and armature at the opposite end with a spring in between.

When a current load passes through the coil winding, it creates a magnetic field. As long as the current load is either at or below the nominal rating of the breaker, the metal core will remain stationary.

If the current load increases beyond the nominal rating, the strength of the magnetic field causes the core to move toward the pole-end of the tube. The oil viscosity regulates the core's movement through the tube, thereby regulating the time delay. As the percentage of current load increases, the required trip time of the breaker decreases and vice versa.

When the current reaches the overload rating, the metal core will meet the pole piece at the opposite end of the tube. At this point, the armature is attracted to the same pole piece, tripping the breaker.

In case of sudden short circuit, the magnetic field created will instantly trip the breaker.

Internal Circuits Overview

Description	Circuit Example
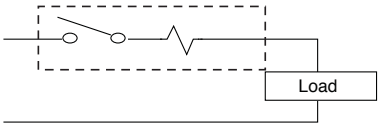	**Series Trip** This is the most common circuit breaker, providing overload and short circuit protection. It can also be used as an ON/OFF switch.
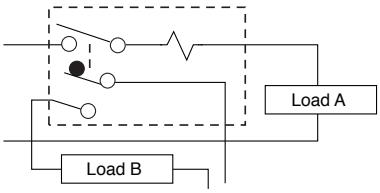	**Series Trip with Auxiliary Contact** Since the auxiliary contact operation is interlocked with the ON/OFF of the main contactor, circuit breaker operation can be monitored by a lamp or buzzer. This circuit breaker can also be used to control auxiliary circuits up to 250V AC/5A (resistive load).
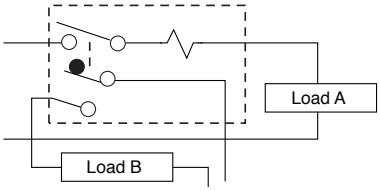	**Series Trip with Alarm Contact** Since the alarm contact is electrically independent of the main contactor, but actuates when the protective element operates. The alarm can be used with a lamp or buzzer to monitor trip operations, and can also be used for controlling alarm circuits. The contact rating is 250V AC/5A (resistive load).